advanced

Schottky

High Performance Schottky Diode
Low Loss and Soft Recovery
Single Diode

V_{RRM} = 40 V
I_{FAV} = 1 A
V_F = 0.40 V

Part number *(Marking on product)*

DSB 1 I 40 SA *(S1FB)*

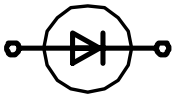

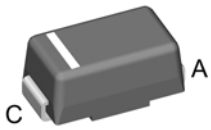

Features / Advantages:

- Very low Vf
- Extremely low switching losses
- Low Irm-values
- Improved thermal behaviour
- High reliability circuit operation
- Low voltage peaks for reduced protection circuits
- Low noise switching
- Low losses

Applications:

- Rectifiers in switch mode power supplies (SMPS)
- Free wheeling diode in low voltage converters
- Decoupling diode

Package:

SMA (DO-214AC)

- Industry standard outline
- Epoxy meets UL 94V-0
- RoHS compliant

Symbol	Definition	Conditions		Ratings min.	typ.	max.	Unit
V_{RRM}	*max. repetitive reverse voltage*		T_{VJ} = 25 °C			40	V
I_R	*reverse current*	V_R = 40 V	T_{VJ} = 25 °C			0.1	mA
		V_R = 40 V	T_{VJ} = 125 °C			15	mA
V_F	*forward voltage*	I_F = 1 A	T_{VJ} = 25 °C			0.48	V
		I_F = 2 A				0.58	V
		I_F = 1 A	T_{VJ} = 125 °C			0.40	V
		I_F = 2 A				0.50	V
I_{FAV}	*average forward current*	rectangular, d = 0.5	T_L = 125 °C			1	A
V_{F0}	*threshold voltage* } *for power loss calculation only*		T_L = 150 °C				V
r_F	*slope resistance*						mΩ
R_{thJL}	*thermal resistance junction to lead**					40	K/W
T_{VJ}	*virtual junction temperature*			-55		150	°C
P_{tot}	*total power dissipation*		T_L = 25 °C			3	W
I_{FSM}	*max. forward surge current*	t_p = 10 ms (50 Hz), sine	T_{VJ} = 45 °C			45	A
C_J	*junction capacitance*	V_R = V; f = 1 MHz	T_{VJ} = 25 °C			78	pF
E_{AS}	*non-repetitive avalanche energy*	I_{AS} = A; L = 100 µH	T_{VJ} = 25 °C			tbd	mJ
I_{AR}	*repetitive avalanche current*	$V_A = 1.5 \cdot V_R$ typ.; f = 10 kHz				tbd	A

** mounted on 1 inch square PCB*

IXYS reserves the right to change limits, conditions and dimensions. Data according to IEC 60747 and per diode unless otherwise specified

0614

© 2006 IXYS all rights reserved

advanced

Symbol	Definition	Conditions	Ratings min.	typ.	max.	Unit
I_{RMS}	*RMS current*	per pin*				A
R_{thJA}	*thermal resistance junction to ambient*			80		K/W
M_D	*mounting torque*					Nm
F_C	*mounting force with clip*					N
T_{stg}	*storage temperature*		-55		150	°C
Weight				0.07		g

* Irms is typically limited by: 1. pin-to-chip resistance; or by 2. current capability of the chip.
In case of 1, a common cathode/anode configuration and a non-isolated backside, the whole current capability can be used by connecting the backside.

Outlines SMA (DO-214AC)

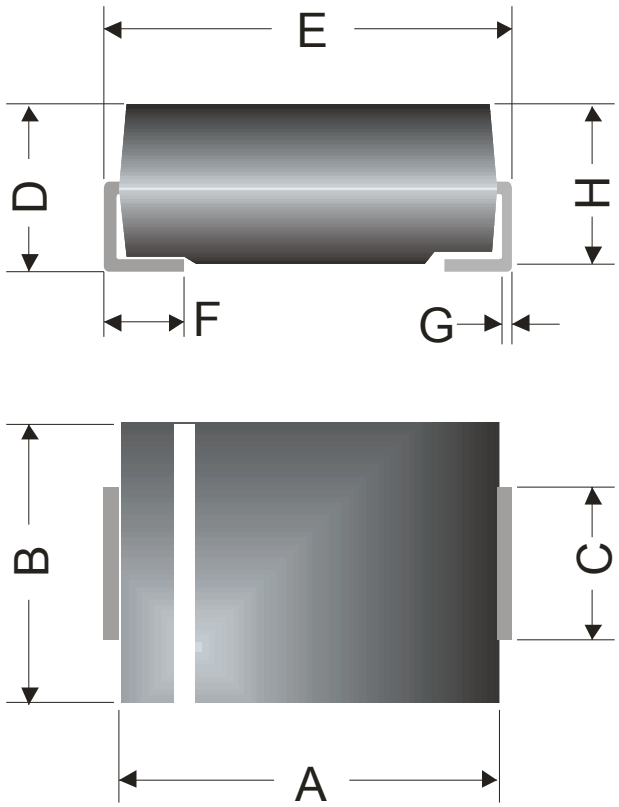

Dim.	Millimeters		Inches	
	min	max	min	max
A	3.99	4.50	0.157	0.177
B	2.54	2.79	0.100	0.110
C	1.25	1.65	0.049	0.065
D	1.98	2.29	0.078	0.090
E	4.93	5.28	0.194	0.208
F	0.76	1.52	0.030	0.060
G	0.15	0.31	0.006	0.012
H	2.00	2.20	0.079	0.087

© 2006 IXYS all rights reserved